ROSWELL

Swivel Clamp Adaptor Assembly Instructions

HARDWARE

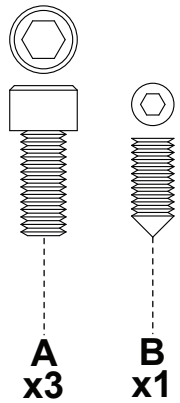

TOOLS REQUIRED

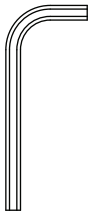

3/16" Allen Key
5/16" Allen Key
1/4" Allen Key

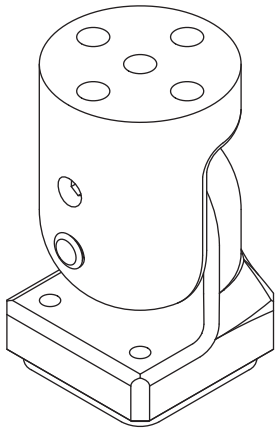

This product is designed to work with a Roswell Universal Clamp and any Roswell Swivel to offer a range of accurate degrees for positioning your board rack on your tower. The installer will need to reference the intended final position in relation to the tower on several occasions to ensure the install is done correctly and safely. Roswell recommends the installer observe all noted reference occasions listed below to achieve a proper installation.

A

First, you will need to determine the correct orientation of the internal disk inside the bottom of the clamp. Hold the clamp near the desired mounting position on the tower, and have a friend hold the adaptor while you rotate the internal disk. Once the position of the internal disk is determined, apply RED Loctite to 3x **A** bolts and assemble the Universal Clamp to the Adaptor as shown below.

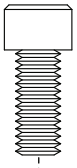

A
x3

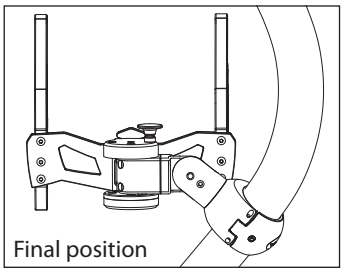

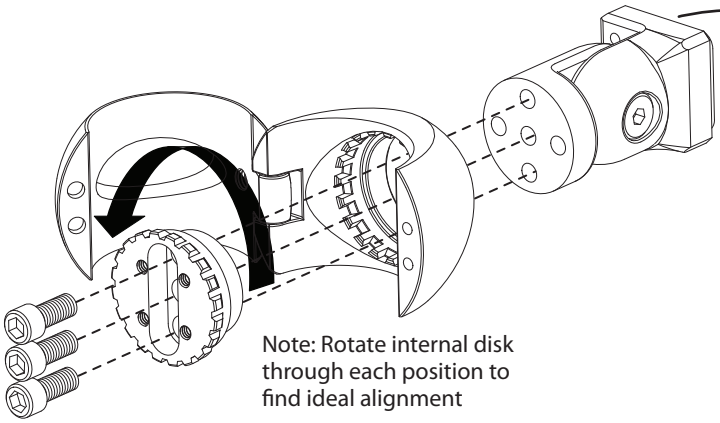

Note: Rotate internal disk through each position to find ideal alignment

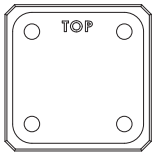

Note: Adaptor's final position must have engraved 'TOP' upright as shown.

C

Apply RED Loctite to the 4x swivel bolts and assemble the Swivel to the Adaptor as shown below. Ensure your swivel is mounted in its correct orientation (pull pin should face up).

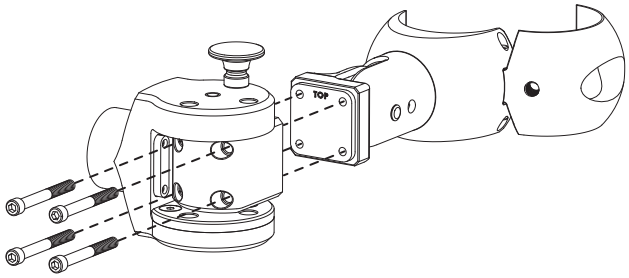

D

Loosen the main adaptor bolt. Then, while referencing the tower, determine the desired angle of the adaptor that allows full and unobstructed use of all swivel positions. Do this by getting the swivel body as close to parallel with the ground as possible, then retighten main adaptor bolt, and fasten the set screw. Complete install by mounting board rack to swivel.

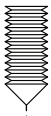
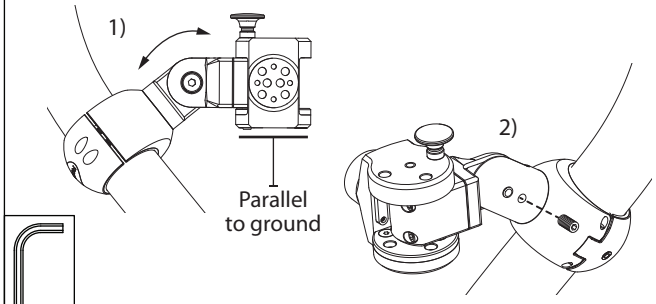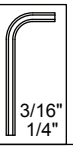
B
x1